REVISIONS				
ZONE	REV	DESCRIPTION	DATE	APPROVED
	B	REDRAWN	13JAN97	
	C	LID THREAD REVISED	09FEB00	
	D	WAS MINI BULK TANK	15AUG11	

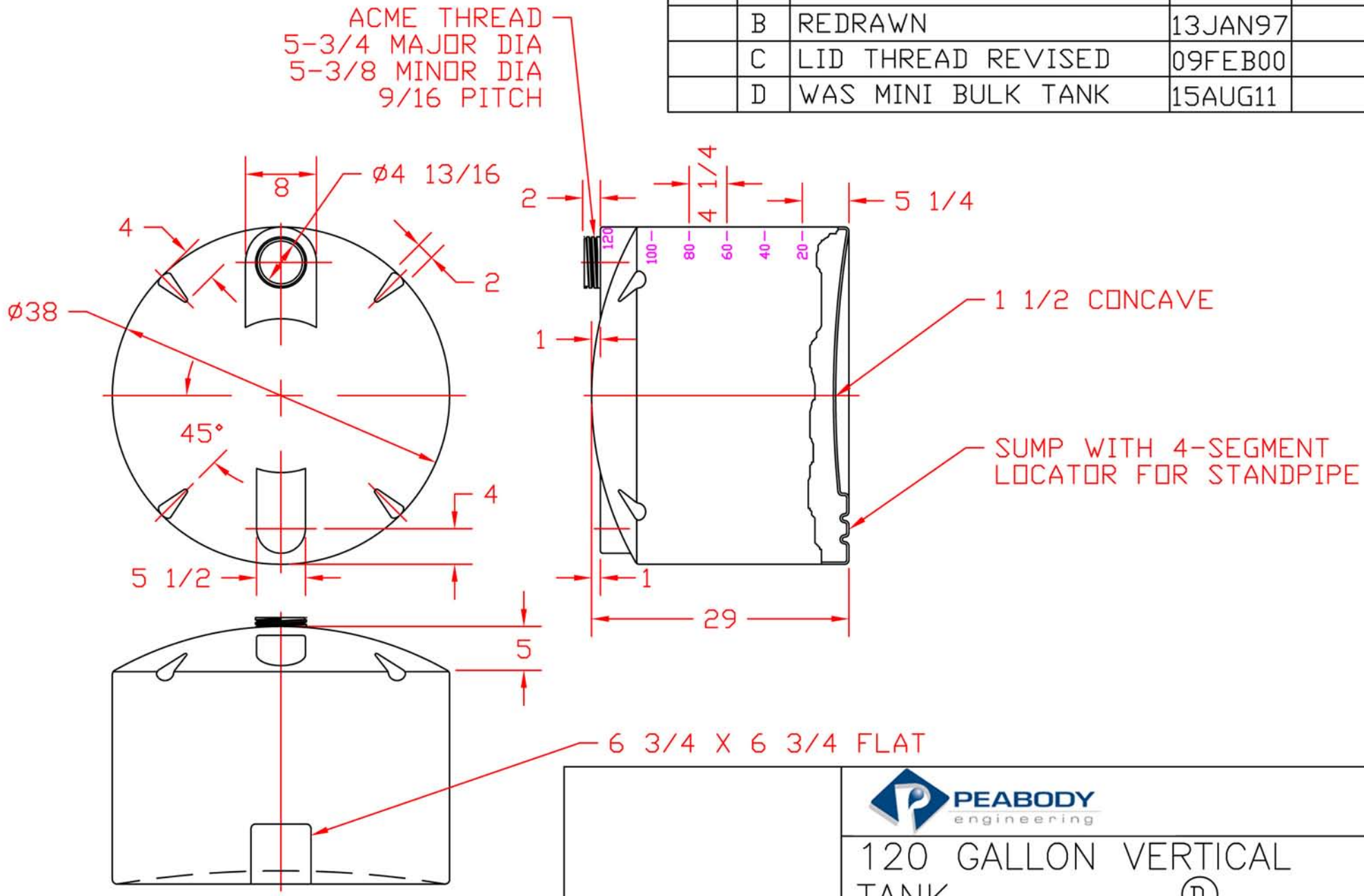

PEABODY engineering

120 GALLON VERTICAL TANK (D)

JTP 13JAN97	SIZE A	FSCM NO.	DWG NO.	REV D
	SCALE 1/16		SHEET	